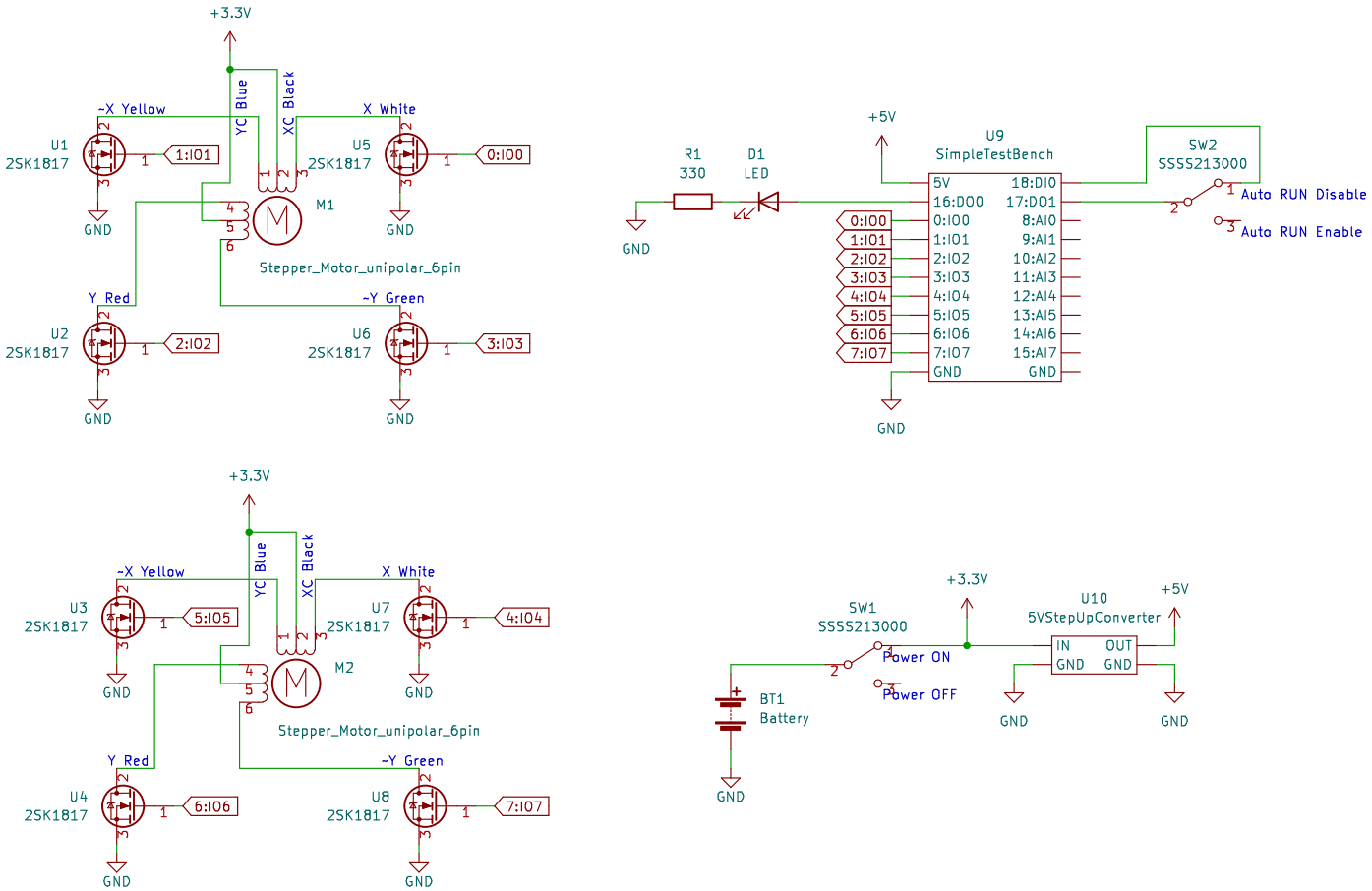
+3.3V
~X Yellow
YC Blue
XC Black
X White
U1
2SK1817
1:I01
U5
2SK1817
0:I00
M1
GND
Stepper_Motor_unipolar_6pin
Y Red
~Y Green
U2
2SK1817
2:I02
U6
2SK1817
3:I03
+5V
R1
330
D1
LED
U9
SimpleTestBench
5V
16:DO0
0:I00
1:I01
2:I02
3:I03
4:I04
5:I05
6:I06
7:I07
GND
18:DI0
17:DO1
8:AI0
9:AI1
10:AI2
11:AI3
12:AI4
13:AI5
14:AI6
15:AI7
SW2
SSSS213000
Auto RUN Disable
Auto RUN Enable
U3
2SK1817
5:I05
U7
2SK1817
4:I04
M2
U4
2SK1817
6:I06
U8
2SK1817
7:I07
SW1
SSSS213000
Power ON
Power OFF
BT1
Battery
U10
5VStepUpConverter
IN
OUT